ISSN 2395-1621

Accident Detection and Vehicle Tracking System

[#1]Sheetal Bajirao Hulsure, [#2]Vidya Sambhaji Mohite,
[#3]Amrin Mukhtar Maniyar, [#4]Prof. A. P. Badave

[1]sheetalhulsure.707@gmail.com

[#123]Department of ENTC Engineering
[#4]Prof. Department of ENTC Engineering

JSPM's, Wagholi, Pune, India.

ABSTRACT

Initially the GPS continuously take input data from the satellite and stores the latitude and longitude values in AT16f877a microcontroller's buffer. If we have to track the vehicle, we need to send a message to GSM device, by which it gets activated. It also gets activated by detecting the accident on the piezoelectric sensor, by detecting fire on the temperature sensor. Parallel deactivates GPS with the help of relay. Once GSM gets activated it takes the last received latitude and longitude position values from the buffer and sends a message to the particular number or laptop which is predefined in the program. Once message has been send to the predefined device the GSM gets deactivated and GPS gets activated.

Keywords: GPS, GSM, AT16f877A, Senssor.

ARTICLE INFO

Article History

Received: 12th April 2017

Received in revised form :

12th April 2017

Accepted: 18th April 2017

Published online :

20th April 2017

I. INTRODUCTION

In India, the motor vehicle population is developing at quicker rate than the economic and population growth. Road traffic injuries are the sixth leading cause of death in India according to the World Health Organization (WHO).Major reason is no proper hospitalization after the accident has occurred. Emergency services are organizations which ensure public safety by addressing different emergencies. Emergency vehicles are permitted to break the rules, in order to reach the destination on time. They are allowed to drive through the intersection when traffic signal light is red. Still, the emergency vehicles are not able to reach the destination on time. The emergency vehicles do not get the information in Immediately after the accident has occurred.

The accident victim is always dependent on the public's mercy to reach the hospital. This increases the chances of death of the victim. The relatives of the victim are also not informed immediately. Their presence is necessary, as only they know the complete medical history of the patient. Moreover, there is always delay in reaching the hospital by the emergency vehicle due to traffic congestion. This is very much common in highly populated countries like India. Hence a proper system should be maintained to detect the accident, its location and send proper information to the relatives and emergency.

To summarize, all the existing approaches are not fully automated with these two integrated services of accident detection and intelligent traffic lights. This approach is fully automated to detect the accident, trace the latitude and longitude positions and generate the Google map. The approach of intelligent accident detection and emergency rescue system detects the accident using crash sensor, mems sensor or piezoelectric sensor immediately sends message to relatives. Simultaneously trace the location using GPS and the latitude and longitude used to generate the Google map. The generated Google map is send to the ambulance section.

II. PROPOSED SYSTEM

The proposed system is used for positioning and navigating the vehicle with an accuracy of 10 m. The Exact location is indicated in the form of latitude and longitude along with the exact Navigated track on Google map.

The system tracks the location of particular vehicle and sends to users mobile in form of data and also to microcontroller. The arrived data, in the form of latitude and longitude is used to locate the Vehicle on the Google maps and also we can see the output on the LCD.

III. BLOCK DIAGRAM

Now-a-days, it became very difficult to know that an accident has occurred and to locate the position where it has happened. It's very difficult for the lives of victims until anyone noticed and informed it to the ambulance or to any hospital and if it occurs in remote areas there will be no hope to survive

A. Transmitter Section

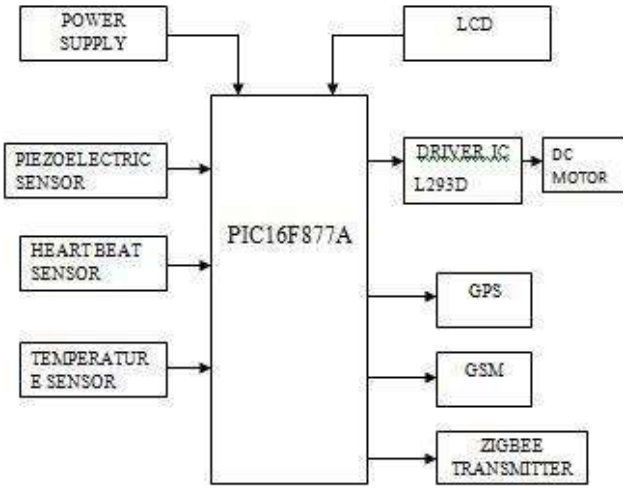

B. Receiver Section

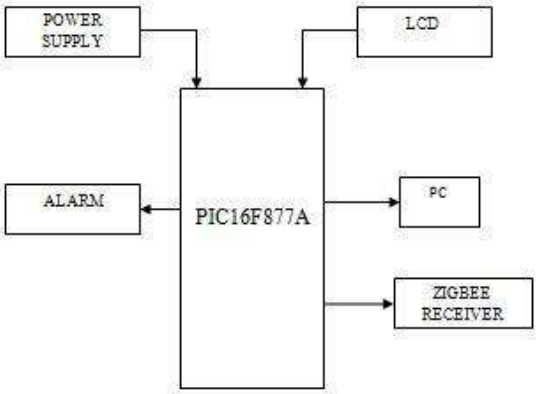

In this Project it is proposed to design an embedded system which is used for tracking and positioning of any vehicle by using Global Positioning System (GPS) and Global system for mobile communication (GSM). In this project 8052 microcontroller is used for interfacing to various hardware peripherals. The current design is an embedded application, which will continuously monitor a moving Vehicle and report the status of the Vehicle on demand. For doing so an 8052 microcontroller is interfaced serially to a GSM Modem and GPS Receiver. A GSM modem is used to send the position (Latitude and Longitude) of the vehicle from a remote place. The GPS modem will continuously give the data i.e. the latitude and longitude indicating the position of the vehicle.

The GPS modem gives many parameters as the output, but only the NMEA data coming out is read and displayed on to the LCD. The same data is sent to the mobile at the other end from where the position of the vehicle is demanded. An EEPROM is used to store the data received by GPS receiver. The hardware interfaces to microcontroller are LCD display, GSM modem and GPS Receiver. In order to interface GSM modem and GPS Receiver to the controller, a MUX is used.

The design uses RS-232 protocol for serial communication between the modems and the microcontroller. A serial driver IC is used for converting TTL voltage levels to RS-232 voltage levels. Different types or sensors such as infrared sensors and fire detector are used for detecting different types of problem encountered in the vehicle such as theft, accident, fire warning etc. In any of these cases messages will be automatically send to the intended receiver. When a request by user is sent to the number at the modem, the system automatically sends a return reply to that particular mobile indicating the position of the vehicle in terms of latitude and longitude. A Program has been developed which is used to locate the exact position of the vehicle and also to navigated track of the moving vehicle on Google Map.

IV. TERMINOLOGY

A. Latitude & Longitude

Both are the angles that are uniquely defined on the sphere. Together the angle comprises the co-ordinate scheme that can locate or identify the geographic position on the planet. Latitude is defined with respect to the equatorial reference, the value becomes positive as it moves towards north and it becomes negative towards south. Longitude is measured with reference to prime meridian and is positive towards east and negative towards west.

B. Routing

Routing means a compass sensor is used to calculate the angle between the current direction of mobile vehicle and magnetic north direction

C. Tracking

Tracking allows the base station to continuously track the vehicle without any interference of the driver or the method of continuously collecting the co-ordinates of moving

V. PRACTICAL MODEL

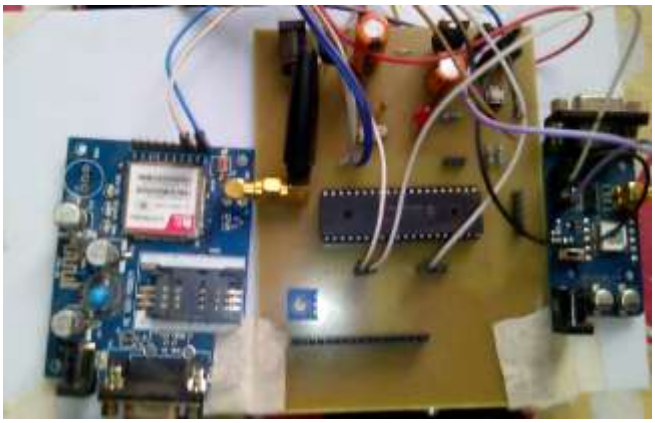

VI. RESULT

The results on the user interface of supervised center will show the routing and tracking function of the system. The

project is locating the position of the car. By designing this project the ignition of the project can be stopped or the speed can be locked so that the thief can be catch easily, this is one of the additional features of the project. There are some approaches affect the accuracy of the system such as the delay of sending and receiving data via GSM network, the multi path effects can make the position error on the GPS receiver, the weather and the assuming of the variation between True North Direction and Magnetic North Direction is zero etc.

VII.CONCLUSION

To minimize the detail and the severe condition due to accidents the GPS and GSM technologies are used where immediate action would be take place by the ambulance/police service which might reduces the severity . Vehicle tracking system makes better fleet management and which in turn brings large profits. Better scheduling or route planning can enable you handle larger jobs loads within a particular time. Vehicle tracking both in case of personal as well as business purpose improves safety and security, communication medium, performance monitoring and increases productivity. So in the coming year, it is going to play a major role in our day-to-day living. Main motto of the project is to incorporate different types of sensors so that they help in decrease the chances of losing life in such accident which we can't stop from occurring. Whenever accident is alerted the paramedics are reached to the particular location to increase the chances of life. This device invention is much more useful for the accidents occurred in deserted places and midnights. This vehicle tracking and accident alert feature plays much more important role in day to day life in future.

REFERENCES

[1] Wireless black box using MEMS accelerometer and GPS tracking for accidental monitoring of vehicles" by Watthanawisuth, N., IEEE conference in Jan, 2012

[2] "Development of vehicle tracking system using GPS and GSM modem" by Hoang Dat Pham, IEEE conference in Dec, 2013

[3] "Traffic-incident detection-algorithm based on nonparametric regression" by Shuming Tang, IEEE conference in March, 2005

[4] "Automatic Accident Detection: Assistance Through Communication Technologies and Vehicles" by Fogue, M., IEEE conference in August, 2012

[5] "Method of Freeway Incident Detection Using wireless Positioning," in Proceedings of the IEEE International Conference on Automation and Logistics, 2008, pp. 2801 - 2804.by L. Chuan-zhi[6] "Automatic Accident Detection And Ambulance Rescue With Intelligent Traffic Light System" by Mr.S.Iyyappan , Mr.V.Nandagopal

[6] "Embedded Automation For Traffic Control With Accident Alert System" by Ujwala Patil, Sachin Chandanshive , Rahul Dhumal, Mohan Torane, Shreya Hiwale.

[7] "Car Authentication and Accident Intimation System Using GPS and GSM" by R.Monisha, Jessen Joseph Leo, B.T.Tharani Sri Sakthi.

[8] "Cell Phone Usage While Driving Avoidance with GSM-RF Based Accident Emergency Alert System" by Prof. Abhay P. Bagade .

[9] "An Optimal 1D Vehicular AccidentWarning Algorithm for Realistic Scenarios" by Marco Roccetti, Gustavo Marfia, Alessandro Amoroso.

.

